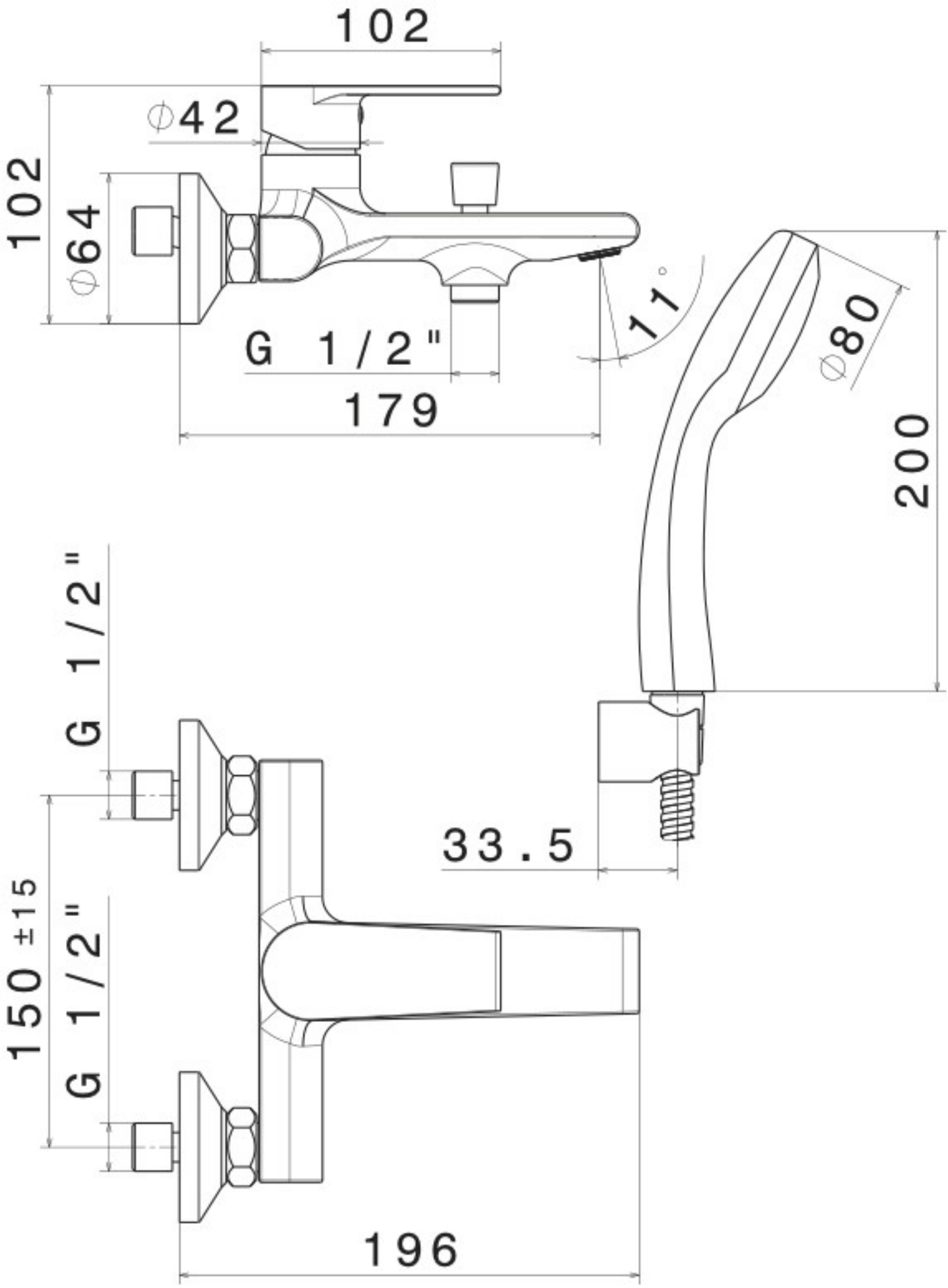
102
∅42
102
∅64
G 1/2"
179
11°
∅80
200
G 1/2"
33.5
150 ±15
G 1/2"
196